UGD Series
DIGITAL THERMOMETER SENSOR

FEATURES

- Unique 1-Wire interface requires only one port pin for communication
- Multidrop capability simplifies distributed temperature sensing applications
- Requires no external components
- Can be powered from data line. Power supply range is 3.0V to 5.5V
- Zero standby power required
- Measures temperatures from -55°C to +125°C. Fahrenheit equivalent is -67°F to+257°F
- ±0.5°C accuracy from -10°C to +85°C
- Thermometer resolution is programmable from 9 to 12 bits
- Converts 12-bit temperature to digital word in 750 ms (max.)
- User-definable, nonvolatile temperature alarm settings
- Alarm search command identifies and addresses devices whose temperature is outside of programmed limits (temperature alarm condition)
- Applications include thermostatic controls, DS18B20Z8-Pin SOIC (150 mil)
- Industrial systems, consumer products, thermometers, or any thermally sensitive system

PIN ASSIGNMENT

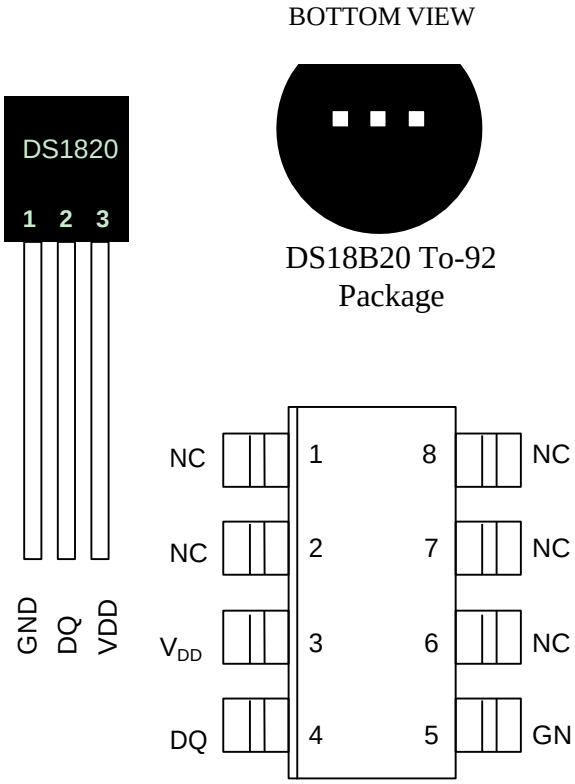

DETAILED PIN DESCRIPTION Table 1

PIN 8PIN SOIC	PIN TO92	SYMBOL	DESCRIPTION
5	1	GND	Ground.
4	2	DQ	**Data Input/Output pin.** For 1-Wire operation: Open drain. (See "Parasite Power" section.)
3	3	V_{DD}	**Optional V_{DD} pin.** See "Parasite Power" section for details of connection. V_{DD} must be grounded for operation in parasite

DS18B20Z (8-pin SOIC): All pins not specified in this table are not to be connected.

OVERVIEW

The block diagram of Figure 1 shows the major components of the DS18B20. The DS18B20 has four main data components: 1) 64-bit lasered ROM, 2) temperature sensor, 3) nonvolatile temperature alarm triggers TH and TL, and 4) a configuration register. The device derives its power from the 1-Wire communication line by storing energy on an internal capacitor during periods of time when the signal line is high and continues to operate off this power source during the low times of the 1-Wire line until it returns high to replenish the parasite (capacitor) supply. As an alternative, the DS18B20 may also be powered from an external 3 volt - 5.5 volt supply.

Communication to the DS18B20 is via a 1-Wire port. With the 1-Wire port, the memory and control functions will not be available before the ROM function protocol has been established. The master must first provide one of five ROM function commands: 1) Read ROM, 2) Match ROM, 3) Search ROM, 4) Skip ROM, or 5) Alarm Search. These commands operate on the 64-bit lasered ROM portion of each device and can single out a specific device if many are present on the 1-Wire line as well as indicate to the bus master how many and what types of devices are present. After a ROM function sequence has been successfully executed, the memory and control functions are accessible and the master may then provide any one of the six memory and control function commands.

One control function command instructs the DS18B20 to perform a temperature measurement. The result of this measurement will be placed in the DS18B20's scratch-pad memory, and may be read by issuing a memory function command which reads the contents of the scratchpad memory. The temperature alarm triggers TH and TL consist of 1 byte EEPROM each. If the alarm search command is not applied to the DS18B20, these registers may be used as general purpose user memory. The scratchpad also contains a configuration byte to set the desired resolution of the temperature to digital conversion. Writing TH, TL, and the configuration byte is done using a memory function command. Read access to these registers is through the scratchpad. All data is read and written least significant bit first.

For situations where the bus master does not know whether the DS18B20s on the bus are parasite powered or supplied with external V_{DD}, a provision is made in the DS18B20 to signal the power supply scheme used. The bus master can determine if any DS18B20s are on the bus which require the strong pullup by sending a Skip ROM protocol, then issuing the read power supply command. After this command is issued, the master then issues read time slots. The DS18B20 will send back "0" on the 1-Wire bus if it is parasite powered; it will send back a "1" if it is powered from the V_{DD} pin. If the master receives a "0," it knows that it must supply the strong pullup on the DQ line during temperature conversions. See "Memory Command Functions" section for more detail on this command protocol.

Order Map	UGD -	18B20 -	□□	□□□
	Series Code	Thermometer	Leads Gauge	Lengths
	Digital Temperature Sensor		28AWG : 28	400: 400 mm